5320-CP

Straight Blade Wiring Devices

Color: Brown

UPC Code: 07847715130

Country of Origin: Please Contact Customer Service

NEMA: 5-15R

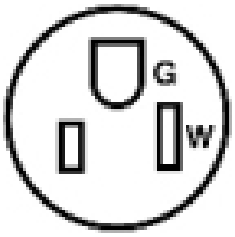

Brand Features

Leviton's comprehensive Residential Grade Receptacles portfolio includes devices rated for all residential applications in a variety of standard configurations. They are produced in an array of colors in both Decora and traditional styles. All duplex receptacles are designed with thermoplastic construction and feature a shallow build for maximum wiring room. Each duplex is also equipped with break-off plaster ears and tabs to allow for easy alignment and two-circuit conversion.

Item Description

15 Amp, 125 Volt, NEMA 5-15R, 2P, 3W, With Ears Duplex Receptacle, Straight Blade, Residential Grade, Grounding, All Screws Backed Out Contractor Pack, Quickwire Push-In & Side Wired, Steel Strap, - Brown

Technical Information

Product Features

Grounding: Grounding

Feature: All Screws Backed Out Contractor Pack

Feature: All Screws Backed Out

Amperage: 15 Amp

Voltage: 125 Volt

NEMA: 5-15R

Pole: 2

Wire: 3

Termination: Quickwire Push-In & Side

Face Material: Thermoplastic

Body Material: Thermoplastic

Strap Material: Steel

Color: Brown

Standards and Certifications: UL

Warranty: 2 Year Limited

Dimensional Diagram

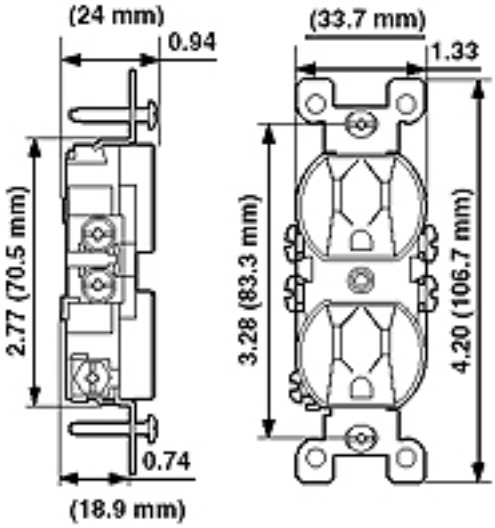

Wiring Diagram

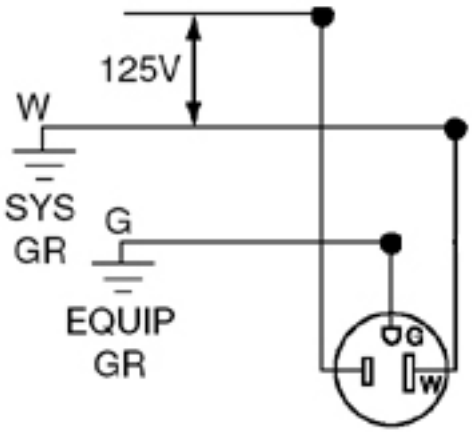

5-15R

SPECIFICATION SUBMITTAL

JOB NAME:	CATALOG NUMBERS:	
JOB NUMBER:		

Leviton Manufacturing Co., Inc.
201 North Service Road, Melville, NY 11747
Telephone: 1-800-323-8920 · FAX: 1-800-832-9538 · Tech Line (8:30AM-7:30PM E.S.T. Monday-Friday): 1-800-824-3005

Leviton Manufacturing of Canada, Ltd.
165 Hymus Boulevard, Pointe Claire, Quebec H9R 1E9 · Telephone: 1-800-469-7890 ·
FAX: 1-800-824-3005 · www.leviton.com/canada

Leviton S. de R.L. de C.V.
Lago Tana 43, Mexico DF, Mexico CP 11290 · Tel.: (+52)55-5082-1040 · FAX: (+52)5386-1797 · www.leviton.com.mx

Visit our Website at: www.leviton.com
© 2012-2015 Leviton Manufacturing Co., Inc. All rights reserved. Subject to change without notice.

Leviton has a global presence.
If you would like to know where your local Leviton office is located please go to: www.leviton.com/international/contacts/